APPROXIMATE WEIGHTS:

	ALDEC 20	ALDEC 30
TOTAL WEIGHT OF EMPTY DECANTER	1400kg/ 3080lbs	1500kg/3300lbs
ROTATING ASSY INCL. PILLOW BLOCKS	325kg/ 715lbs	350kg/ 780lbs
CPL.FRAME ASSY EXCL. MAIN MOTOR AND ROT. ASSY..	750kg/ 1650lbs	800kg/1770lbs
MAIN MOTOR	150kg/ 330lbs	150kg/ 330lbs
UPPER CASING	65kg/ 145lbs	75kg/ 165lbs
GEAR BOX	60kg/ 130lbs	60kg/ 130lbs
MIN.CRANE CAPACITY FOR LIFTING OF ROTATING ASSY:	450kg/ 1000lbs	450kg/1000lbs

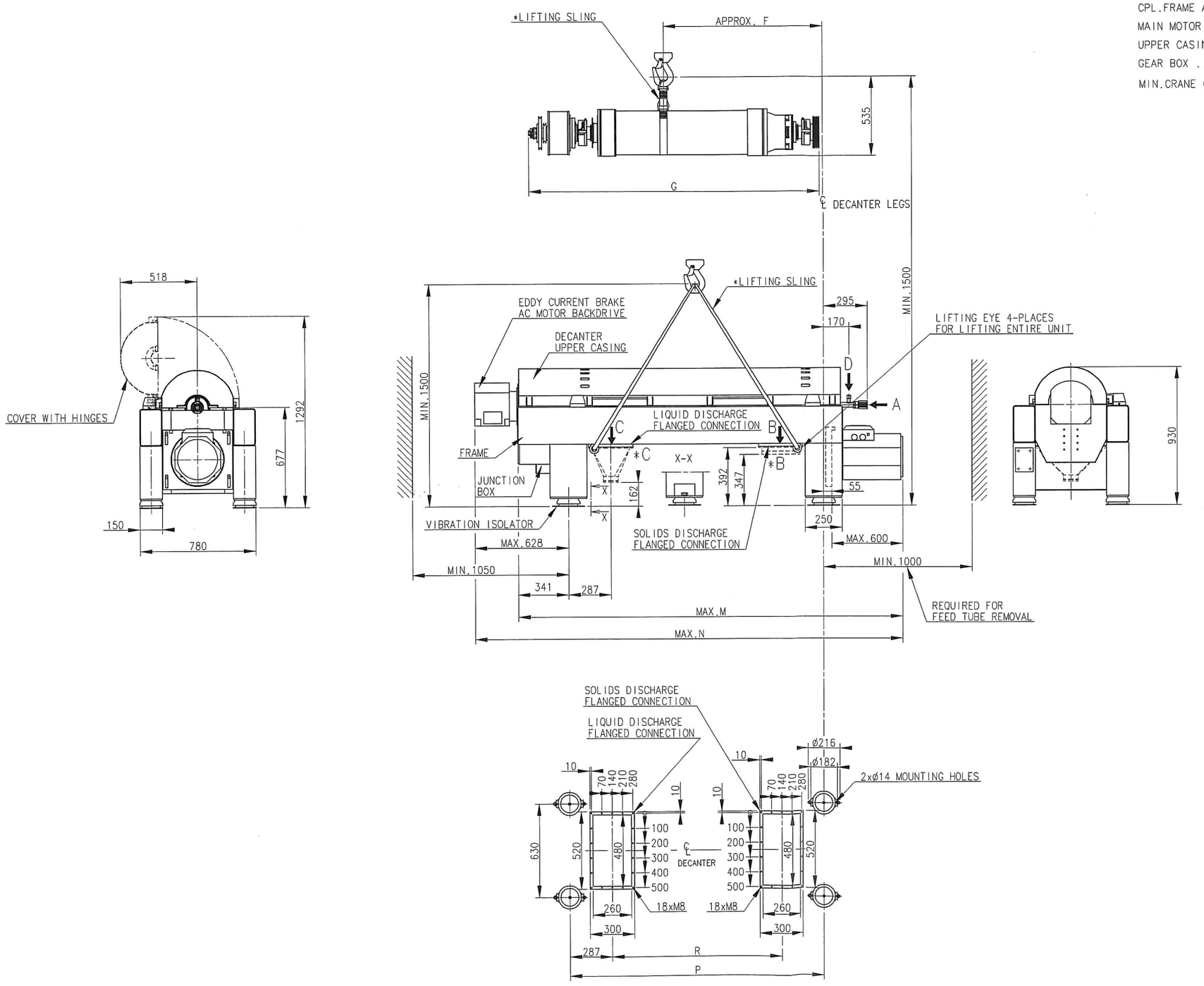

LOADING DATA:

	ALDEC 20	ALDEC 30
DECANTER		
1. MAX. STATIC LOAD		
A- VERTICAL	14800 N	15800 N
B- HORISONTAL.....	0 N	0 N
2. MAX. DYNAMIC LOAD AT RUN DOWN (ADD TO STATIC LOAD)		
A- VERTICAL	± 2000 N	± 2000 N
B- HORIZONTAL.....	± 1000 N	± 1000 N
3. MAX. DYNAMIC LOAD AT OPERATING SPEED		
A- VERTICAL	±200 N	±200 N
B- HORISONTAL.....	±200 N	±200 N

CONNECTIONS:

		DIMENSION / TYPE
A	FEED	ø31.75 (1 1/4")HOSE CONNECTION OD 43-46
B	SOLIDS OUTLET	RECTANGULAR FLANGE
*B	SOLIDS OUTLET FUNNEL.....	477 x 257 TUBE
C	LIQUID OUTLET	RECTANGULAR FLANGE
*C	LIQUID OUTLET FUNNEL	ø100 HOSE CONNECTION
D	POLYMER ADDITION	ISO 228-G 1/2 CONNECTION

MAIN DIMENSIONS:

TYPE	F	G	M	N	P	R
ALDEC 20	930	1680	2446	2733	1450	870
ALDEC 30	1070	1960	2726	3013	1730	1150

NOTES:

1- ALL CONNECTIONS MUST BE FLEXIBLE.

2- FOR PROPER VENTING OF DISCHARGE HOPPERS REFER TO THE INSTALLATION DRAWING. IMPROPER VENTING CAN LEAD TO LEAKAGE PROBLEMS.

3- CUSTOMER IS RESPONSIBLE FOR ANCHORING.

4- FOR FURTHER INFORMATION, SEE INSTALLATION DATA MANUAL AND INSTALLATION DRAWING

* OPTIONAL EQUIPMENT

This document and its contents are the exclusive property of Alfa Laval Copenhagen A/S and may not be copied or reproduced without written permission, nor used for any purpose other than that for which it is lent.

This document may qualified as controlled dual-use goods in accordance with applicable export control laws. Re-export or re-transfer is prohibited unless authorised by Alfa Laval Copenhagen A/S only to the extent expressly agreed upon.

Rev. No.	Date	Modified By	Appr.
9	051220	DFø	OAN

OD 43-46 ADDED

Item	Article No.	Name/Designation	Material
1.5 kWn GEAR BOX			

Title: DIMENSIONED DRAWING

ALDEC 20/30

Alfa Laval

Alfa Laval Copenhagen A/S
SØBORG DENMARK

First angle projection	Surface roughness	Scale	Dept.	Date	Design Code
	R_A µm	1:10	GKU	040219	
		Format	Drawn	Appr. / Model	Document No.
		A0	ADA	OAN / N	61240440